Training Action 2

Santa Catarina, Brazil
August 22th – 26th, 2016

IPP/ISEP
Arcelina Marques (mmr@isep.ipp.pt)
Carlos Felgueiras (mcf@isep.ipp.pt)
Natércia Lima (nmm@isep.ipp.pt)
Ricardo Costa (rjc@isep.ipp.pt)

Co-funded by the Erasmus+ Programme of the European Union

TA2 Structure

Day 1

9:00

1A - Contextualization

1B - Using VISIR (Demo)

10:15

10:30

1C - Using VISIR (Hands-on)

12:30

Day 2

9:30

2A- Didactical Implementations

10:45

11:00

2B - Data Collection

12:00

POLITÉCNICO DO PORTO

Co-funded by the Erasmus+ Programme of the European Union

Using VISIR

Day 1 – Sessions 1B

Co-funded by the Erasmus+ Programme of the European Union

Outline

1. Introduction to VISIR
    - 1.1 Web access
    - 1.2 Experiments preparation
    - 1.3 Hardware, connections and *MaxLists*
    - 1.4 Users and circuits
2. Demo
3. Hands-on training

Introduction to VISIR

Introduction to VISIR (web access)

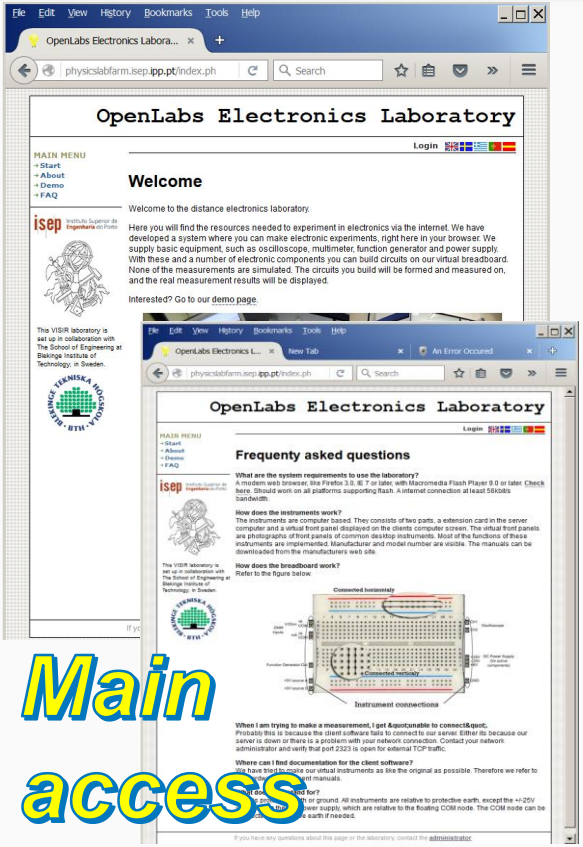

Main access

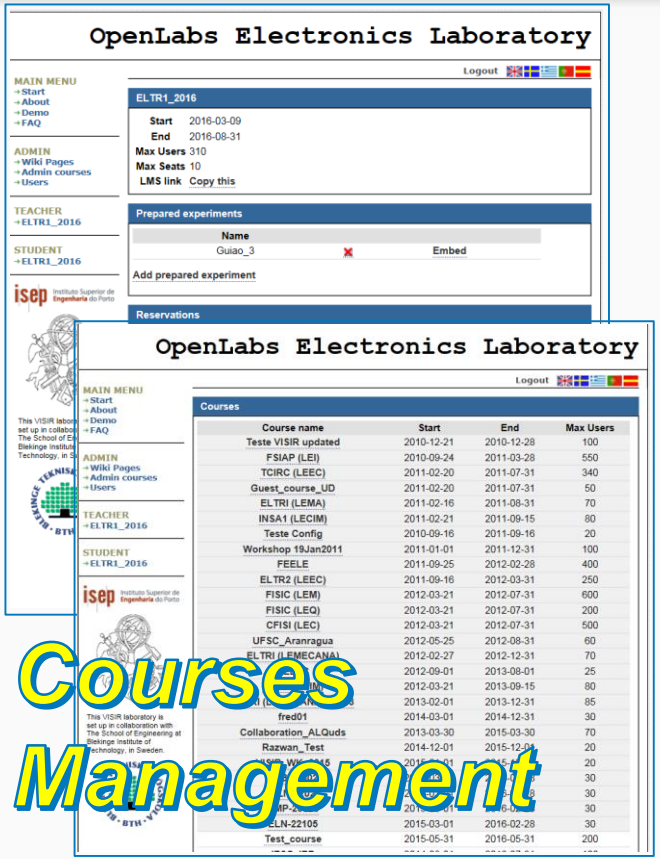

Courses Management

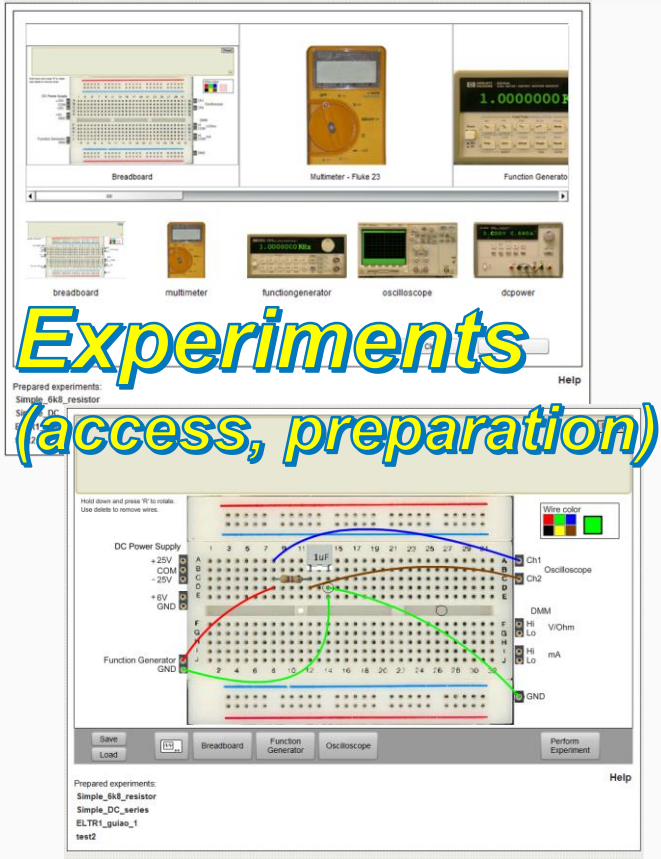

Experiments (access, preparation)

Introduction (experiments preparation)

Course management

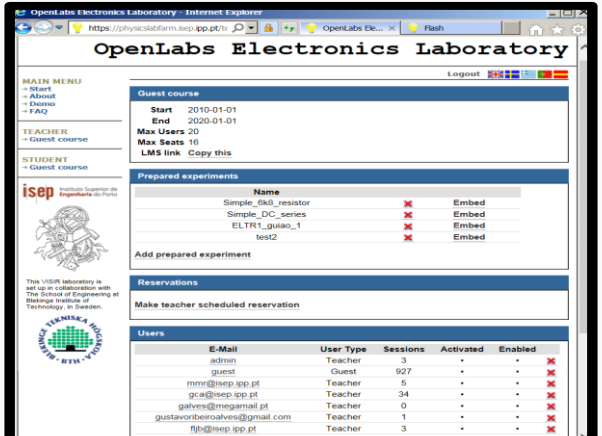

***MaxList* file (*.max)**

VFGENA_FGENA1 A 0 max:6
VDCCOM_1 0
R_R1_10 B C 470
C_C2_9 E I 1u
SHORTCUT_S1_5 F 0
SHORTCUT_S1_14 A B
SHORTCUT_S2_6 G 0
SHORTCUT_S2_7 F G
SHORTCUT_S3_13 C E
SHORTCUT_S4_6 I G

***Component List* file (*.list)**

SHORTCUT_1_4 B I
SHORTCUT_1_5 F 0
SHORTCUT_1_11 0 C
SHORTCUT_1_12 H 0
SHORTCUT_1_13 A
SHORTCUT_1_14 A
SHORTCUT_2_1 G F

SHORTCUT_1_4 B I
SHORTCUT_1_5 F 0
SHORTCUT_1_11 0 C
SHORTCUT_1_12 H 0
SHORTCUT_1_13 A G
SHORTCUT_1_14 A B
SHORTCUT_2_1 G H

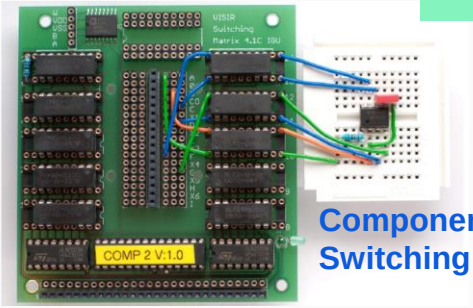

Components attached to a Switching Matrix

Introduction (Hardware, connections and *MaxLists*)

These rules must be defined according to the available hardware connections defined in the *ComponentList* file

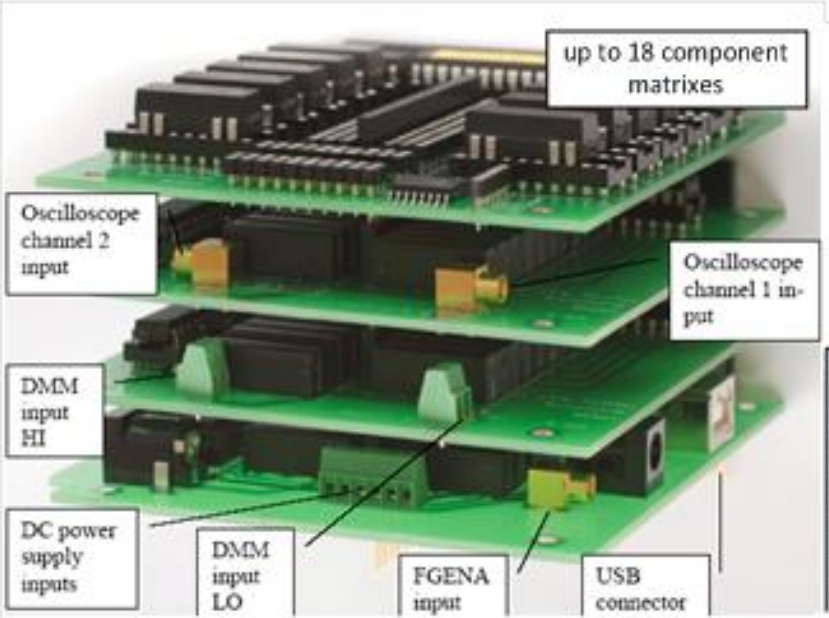

a) Example of switching matrixes

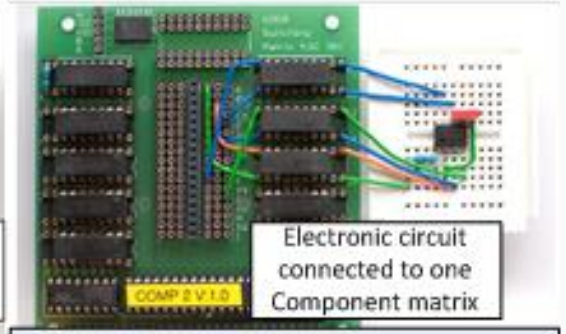


```
(...)
VFGENA_FGENA1 A 0 max:5
SHORTCUT_1 0 A
*5VA_1 A 0
SHORTCUT_2 A B
R_1 A B 10k
C_3 A B 56n
(...)
```

MaxList sample (incomplete)

b) Components connected to a matrix and a *MaxList* file sample

Introduction (Hardware, connections and *MaxLists*)

Pictures of the VISIR system installed at ISEP

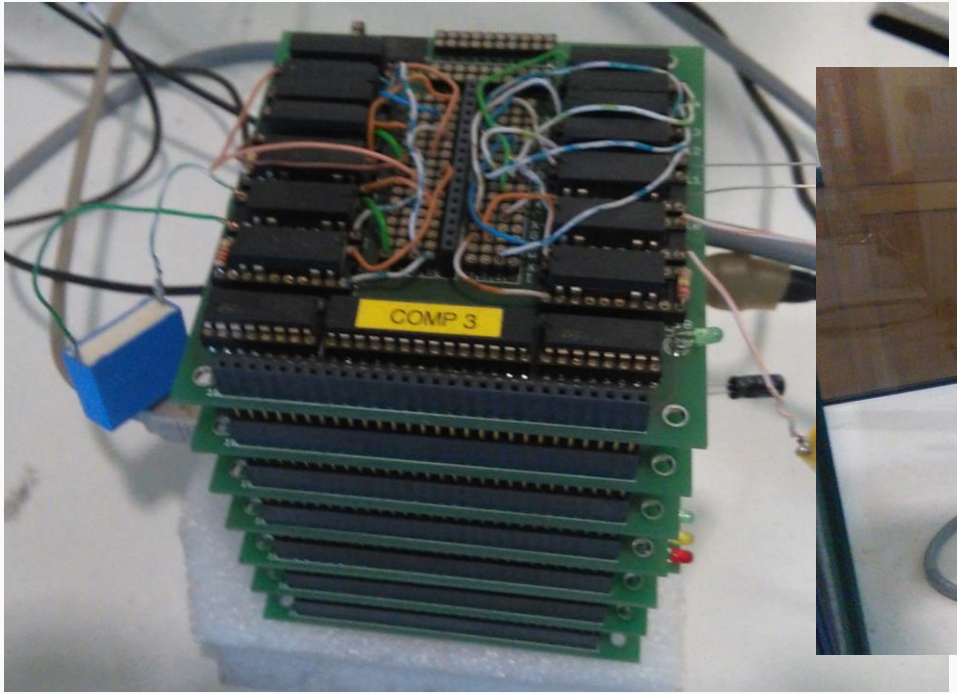

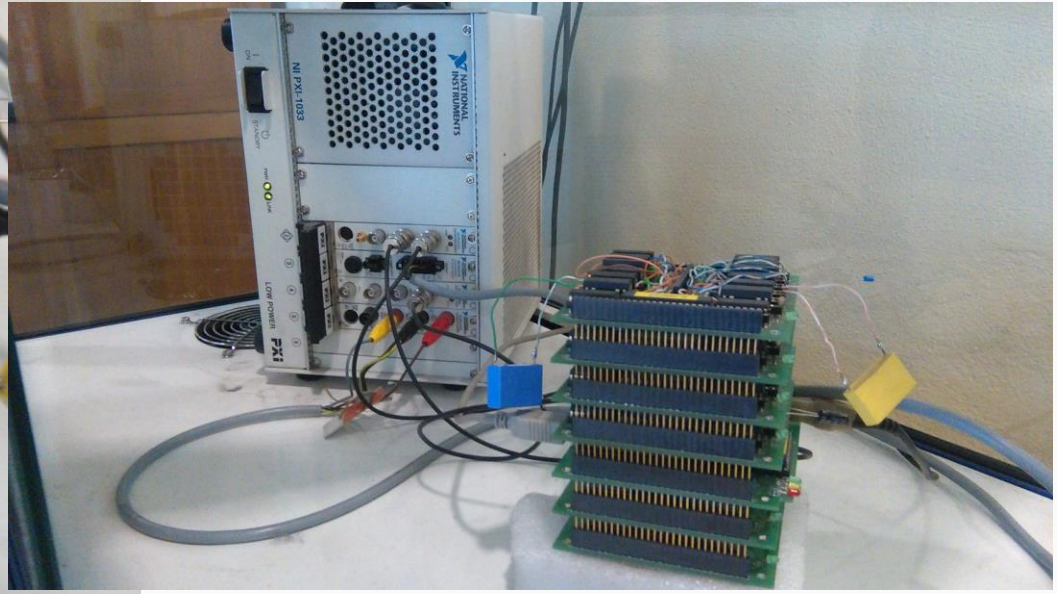

Introduction (Users and circuits)

Virtual breadboard and instrument selection using the VISIR

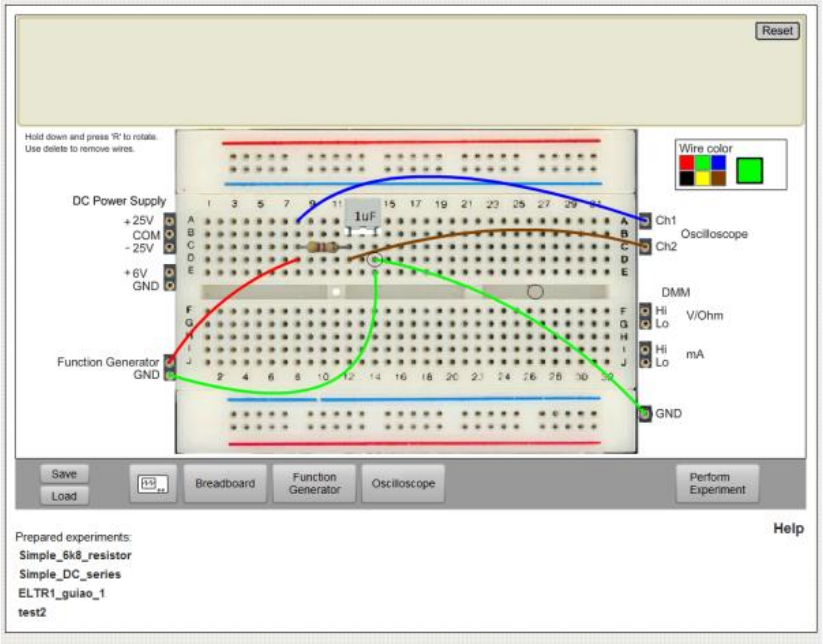

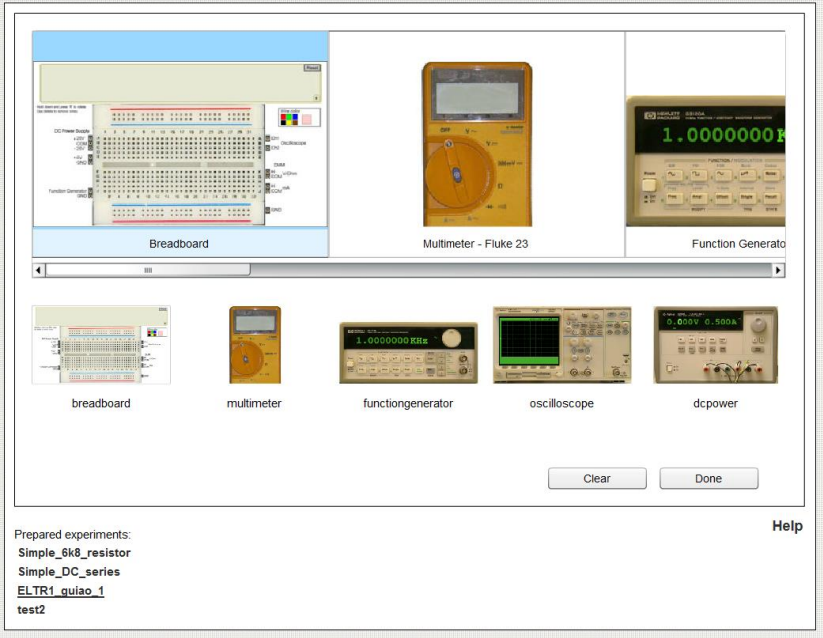

Introduction (Users and circuits)

Instruments interfaces used during a remote experiment using VISIR

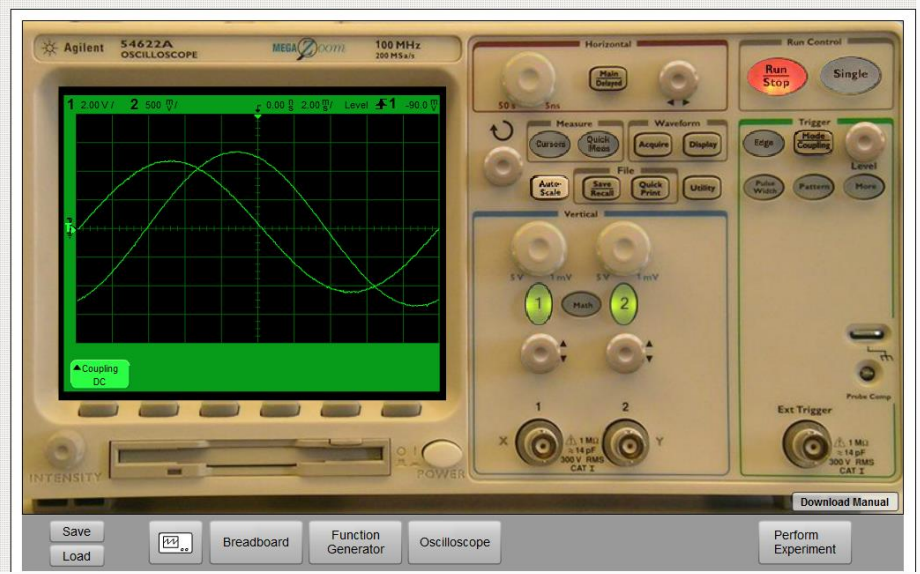

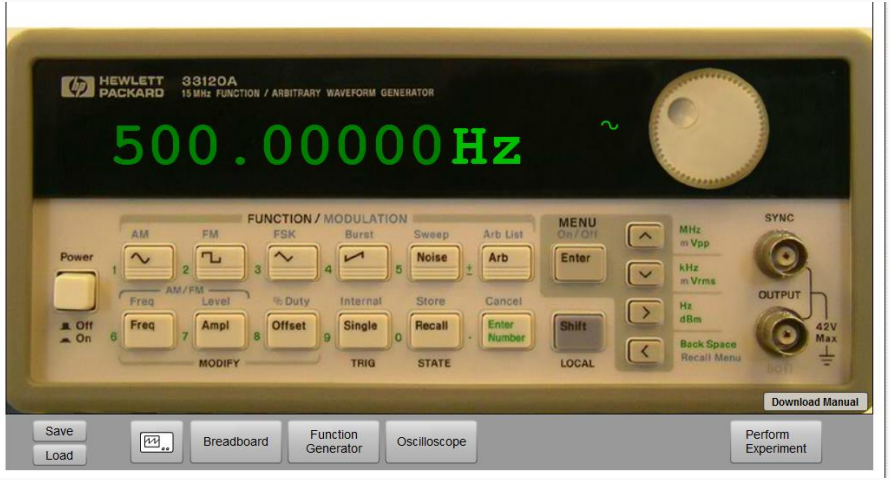

Introduction (Users and circuits)

Course management

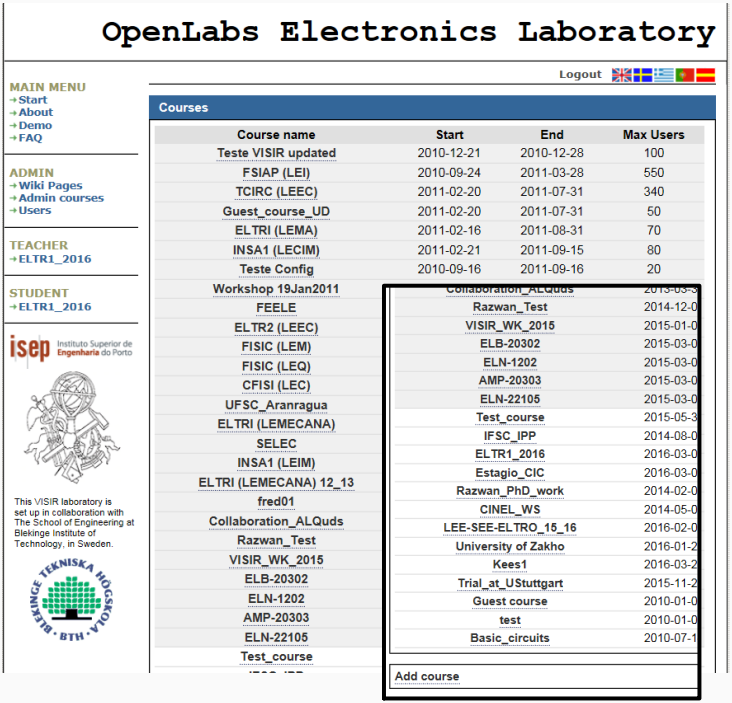

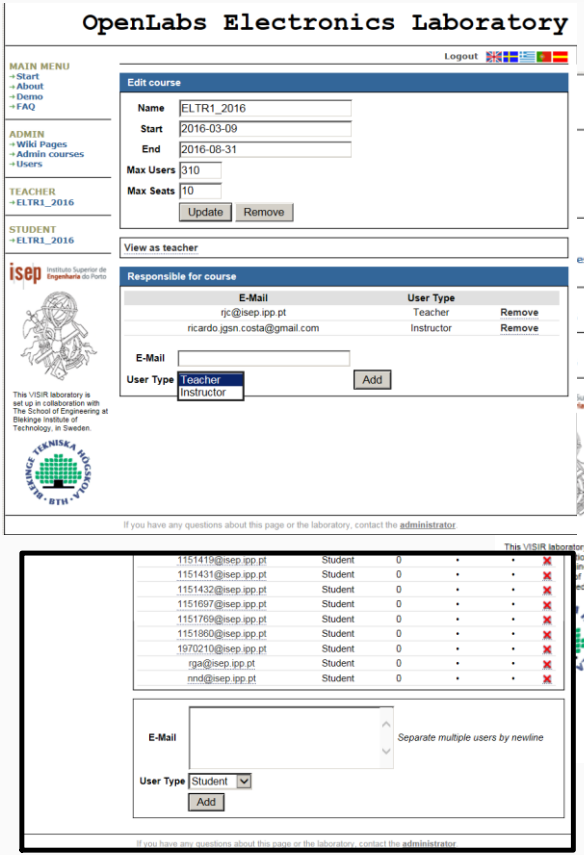

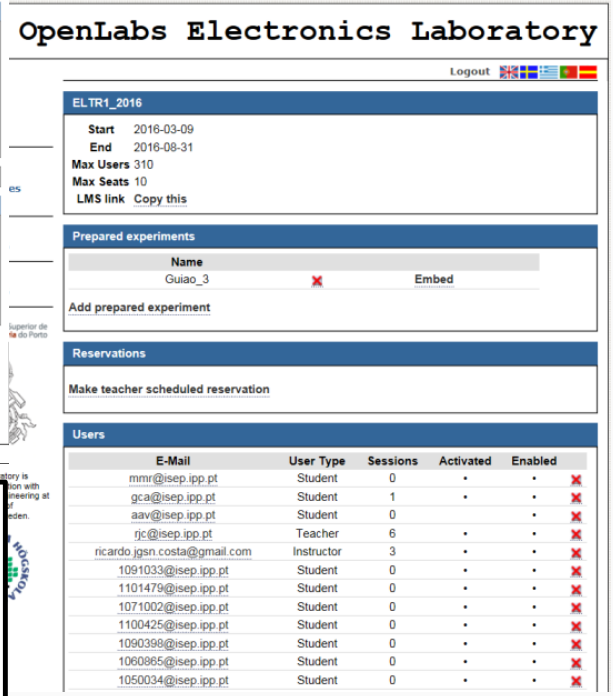

Demo

Demo (circuit 1)

Web access: www.physicslabfram.isep.ipp.pt (Course:*TA_VISIR*; Name:*TA_demo1*)

Serial resistor circuit

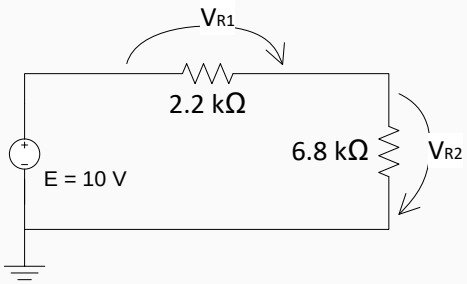

MaxList

VDC+25V_24_4:4_11 F
VDCCOM_24_2 0

R_3_1 E I 2.2k
R_4_1 G I 6.8k

SHORTCUT_3_14 E F
SHORTCUT_2_6 G 0

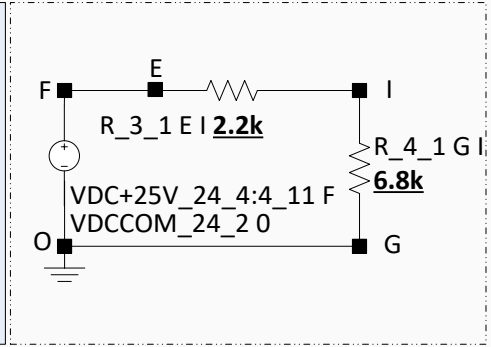

MaxList defined according to the following nodes using the available components connections specified in the *componentList* file.

1. Observe the value of each resistor using the interface and confirm it with the DMM;
2. Selecting the +25 V DC power, setup the circuit in the virtual breadboard and connect the outputs +25V and COM to the circuit (connect the COM to the GND).
3. Connect the DMM and measure the voltage in each resistor;
4. Connect the DMM to measure the current in the circuit; a)Place the DMM between the voltage source and the resistor; b) Place the DMM between both resistors and observe that there is an error (verify the rules defined in the *MaxList* file that is also available in Annex C);
5. Swap the resistors and observe that there is an error (rules defined in the *MaxList* file also available in Annex C).

Demo (circuit 2)

Web access: www.physicslabfram.isep.ipp.pt (Course:*TA_VISIR*; Name:*TA_demo2*)

Serial RC circuit

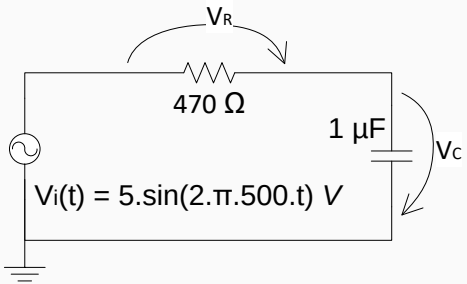

MaxList

VFGENA_24_1 A 0

R_1_10 B C 470
C_2_9 E I 1u

SHORTCUT_3_13 C E
SHORTCUT_1_14 A B
SHORTCUT_3_6 0 I

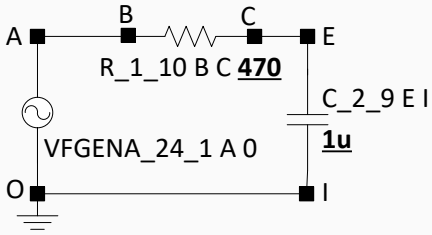

MaxList defined according to the following nodes using the available components connections specified in the *componentList* file.

1. Observe the value of each component using the interface and confirm the value of the resistor with the DMM;
2. Setup the circuit in the virtual breadboard and adjust the voltage and the frequency levels of the Function Generator as indicated;
3. Confirm the adjusted voltage and frequency levels using the Oscilloscope.
4. Connect the terminals of the Oscilloscope to observe simultaneously the signal generated by the function generator, vi(t), and the signal in the capacitor, vc (t) (test the different buttons available in the oscilloscope);
5. Adjust the Oscilloscope as you traditionally do in a hands-on laboratory to calculate the gap between both signals;

Demo (circuit 2)

Web access: www.physicslabfram.isep.ipp.pt (Course:*TA_VISIR*; Name:*TA_demo2*)

Serial RC circuit

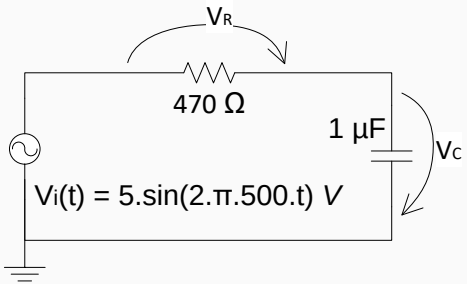

MaxList

VFGENA_24_1 A 0

R_1_10 B C 470
C_2_9 E I 1u

SHORTCUT_3_13 C E
SHORTCUT_1_14 A B
SHORTCUT_3_6 0 I

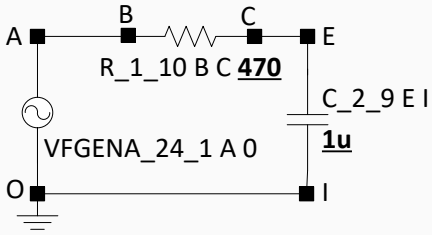

MaxList defined according to the following nodes using the available components connections specified in the *componentList* file.

6. Do not connect the instruments' grounds and observe if there is any error;
7. Verify the restrictions imposed by the VISIR to observe simultaneously the signals in the resistor, vr(t), and in the capacitor vc(t);
8. Swap the positions of R and C components and observe the generated error (verify the rules in the *MaxList* file that is also available in Annex C);
9. Using the DMM, measure the voltages and the currents in the circuit.

Thank you for your attention!

Co-funded by the Erasmus+ Programme of the European Union

TA2 Structure

Day 1

9:00

1A - Contextualization

1B - Using VISIR (Demo)

10:15

10:30

1C - Using VISIR (Hands-on)

12:30

Day 2

9:30

2A- Didactical Implementations

10:45

11:00

2B - Data Collection

12:00

Co-funded by the Erasmus+ Programme of the European Union

Using VISIR: Hands-on

Day 1 – Sessions 1C

Co-funded by the Erasmus+ Programme of the European Union

Circuit 1: DC serial and parallel circuits

Web access: www.physicslabfram.isep.ipp.pt (Course:*TA_VISIR*; Name:*TA_circuit1*)

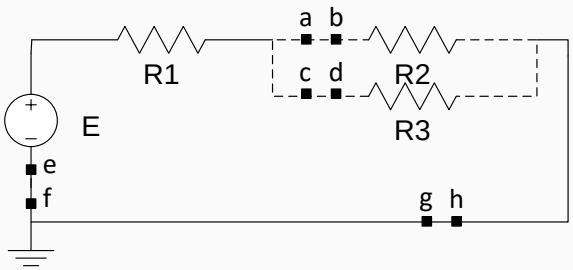

Available resistors			
R1 [Ω]	1.0k	470	22k
R2 [Ω]	2.2k	open	
R3 [Ω]	82k	open	

1. Setup one circuit in the breadboard according to the available resistors in the table;
2. Selecting the DC power, connect the outputs +6V and GND to the circuit;
3. Adjust the voltage source to E=6 V and confirm the value using the DMM;
4. Using the DMM measure the currents in the different branches of the circuit (note: if you try to measure the currents between the indicated points a-b, c-d, e-f or g-h an error will be generated - see the MaxList file in the Annex C -);
5. Using the DMM measure the voltage in each component;
6. Repeat this analysis to the other circuits able to setup according to the possibilities indicated in the table.

Circuit 2: Serial RLC

Web access: www.physicslabfram.isep.ipp.pt (Course:*TA_VISIR*; Name:*TA_circuit2*)

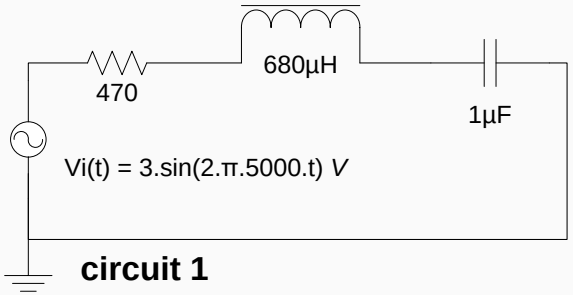

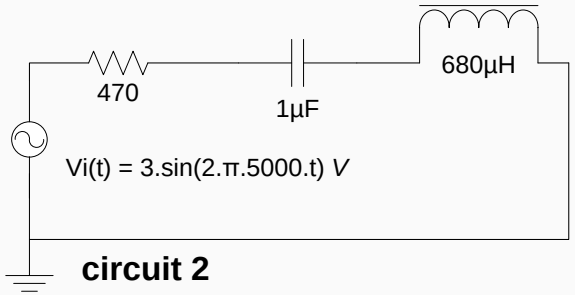

1. Setup circuit 1 and adjust Vi(t) to the indicated values;
2. Using both channels of the oscilloscope confirm and visualize Vi(t) and Vc(t);
3. Using the DMM measure the RMS current in the different branches;
4. Using the DMM measure the RMS voltage in each component;
5. Setup circuit 2 and adjust the Vi(t) to the indicated values;
6. Using both channels of the oscilloscope confirm and visualize Vi(t) and VL(t);
7. Using the DMM measure the RMS current in the different branches;
8. Using the DMM measure the RMS voltage in each component.

Circuit 3: Limiting circuits with diodes

Web access: www.physicslabfram.isep.ipp.pt (Course:*TA_VISIR*; Name:*TA_circuit3*)

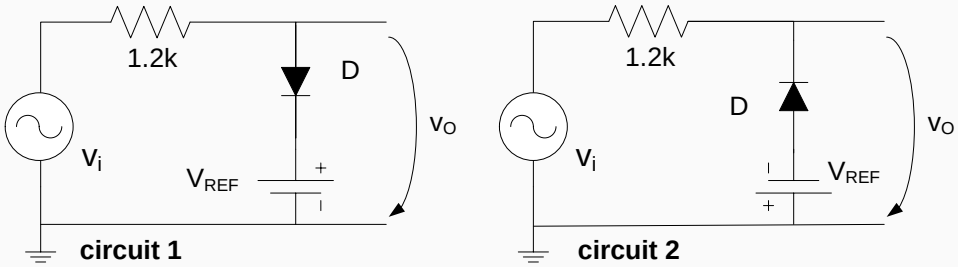

1. Setup circuit 1 and adjust the Function Generator to Vi=5.sin(2.pi.5000.t) V and confirm that value using the Oscilloscope;
2. Selecting the DC power, connect the outputs +25V and COM to the circuit (connect the COM to the GND), and adjust VREF=2 V. Confirm that value using the DMM;
3. Visualize Vi and Vo simultaneously using the Oscilloscope;
4. Change VREF and verify that the commutation point of the diode changes;
5. Setup circuit 2 and repeat steps 2, 3 and 4.

Circuit 4: Circuit with BJT – DC operating point

Web access: www.physicslabfram.isep.ipp.pt (Course:*TA_VISIR*; Name:*TA_circuit4*)

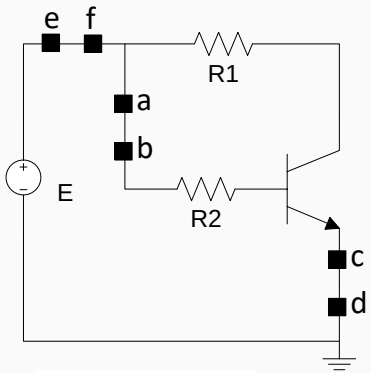

1. Setup the circuit, connect the DC power outputs +6V and COM (connect the COM to the GND), and adjust to E=6 V. Confirm that value using the DMM;
2. Using the DMM, fill-in the following table and evaluate the current state of the BJT (active, saturation or cut-off); (note: you can only measure currents between points a-b, c-d and e-f. Observe the MaxList file in Annex C.)

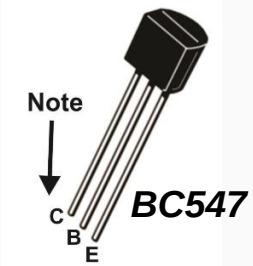

R1	R2	E	IC	IE	IB	VCE	VBE	VBC	state
6k8	22k	6 V							

Circuit 5: Amp-op Inverter Circuit

Web access: www.physicslabfram.isep.ipp.pt (Course:*TA_VISIR*; Name:*TA_circuit5*)

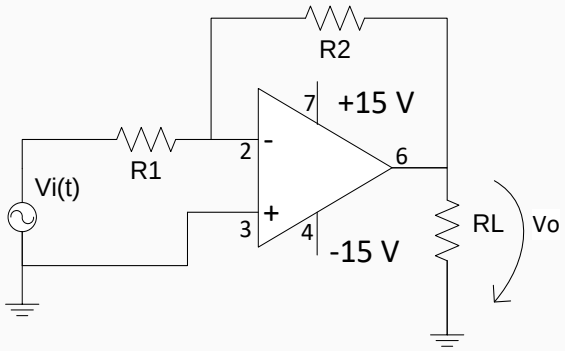

R1= 100 k

R2 = 100 k or 220 k

RL = 2.2 k

E = 6.sin(2.π.5000.t) V

1. Setup the circuit in the virtual breadboard changing R2 according to the values indicated in the table.
2. Using the Function Generator adjust the Vi voltage according to the indicated in the figure and, using the Oscilloscope, verify the amplitude and the frequency;
3. Using the Oscilloscope observe Vi and Vo of the circuit;
4. Using the DMM measure the RMS:

   - voltage in the different components;

   - current in the load.

Thank you for your attention!

Co-funded by the Erasmus+ Programme of the European Union