RAMONA OROS , ANDREAS PESTER
CARINTHIA UNIVERSITY OF APPLIED SCIENCES

Online labs and current trends

10 April 2017

Rio de Janeiro - Brazil

CARINTHIA UNIVERSITY OF APPLIED SCIENCES

FACHHOCHSCHULE KÄRNTEN

Co-funded by the Erasmus+ Programme of the European Union

VISIR+

AGENDA OF THE MEETING

10. April. 2017

13:30 – 14:45 Room....

- Welcome and short presentation CUAS
- What means Online labs? How we can use Online labs in education?
- VISIR experience in international projects
- VISIR developed by students

14:45 – 15:00 Short break

15:00 – 16:00 Room ....

- VISIR@CUAS

16:´00 – 16:30 Wrap up/ Discussions

AGENDA

1. Introduction
2. CUAS team
3. Online labs
4. VISIR@CUAS
5. Wrap up/ Discussions

CARINTHIA UNIVERSITY OF APPLIED SCIENCES

FACHHOCHSCHULE KÄRNTEN

Internationality @ CUAS in numbers

- 140 Partner Higher Education Institution
- 140 Outgoing Exchange Students per year
- 60 Incoming Exchange Students per year
  6 Master Degree Programs in English

WORKING TEAM @ CUAS - VILLACH

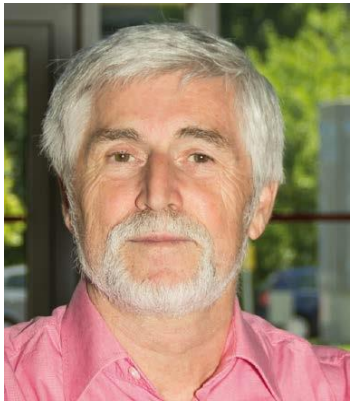

Professor Dr.
Andreas Pester

Professor Dr.
Thomas Klinger

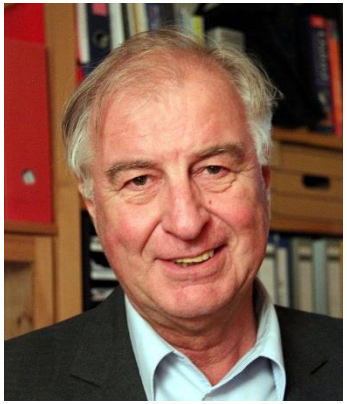

Professor Dr.
Michael Auer

PhD. Ramona G. Oros

MSc. Christian Kreiter

MSc. Danilo G. Zutin

WORKING EXPERIENCE

- We are working in the area of internationalization and online learning since 2004. Since that time we participated and are participating on 2 FP 7 projects, 1 Socrates, 3 Minerva and 4 Tempus projects, 2 Erasmus+, several national projects, dedicated to that topic. The target groups for the application had been universities, schools and SME's.

- We have a worldwide network with partners from all Europe, USA, Latina America, Australia and Asia in this area.

WORKING EXPERIENCE

Our compences are

- Adaptive Interfaces for Online Labs http://www.fh-kaernten.at/projekte/projekthp.php?feoid=4300787437
- Labs in the Cloud from the user and from the lab provider perspectives.
- Inquiry learning environments with online labs
- Distributed architectures for Online Laboratories and Remote Lab Management Systems (RLMS), like ISA (iLab Shared Architecture) http://ilabs.cti.ac.at/iLabServiceBroker/
- Pocket lab environments on myDAQ and Raspberry PI basis

IAOE AND GOLC

http://www.online-engineering.org/

IAOE – international Association of Online Engineering

- the annual "International Conference on Remote Engineering and Virtual Instrumentation" (REV)
- Promotion of scientific and technical events in the field of Online Engineering
- Publication of International Journals
- Organization of seminars, courses etc.

GOLC – Global Online Laboratory Consortium

"The mission of the consortium is the creation of sharable, online experimental environments which increase the educational and scientific value of learning which may not be accessible, scalable or efficient through traditional methods."

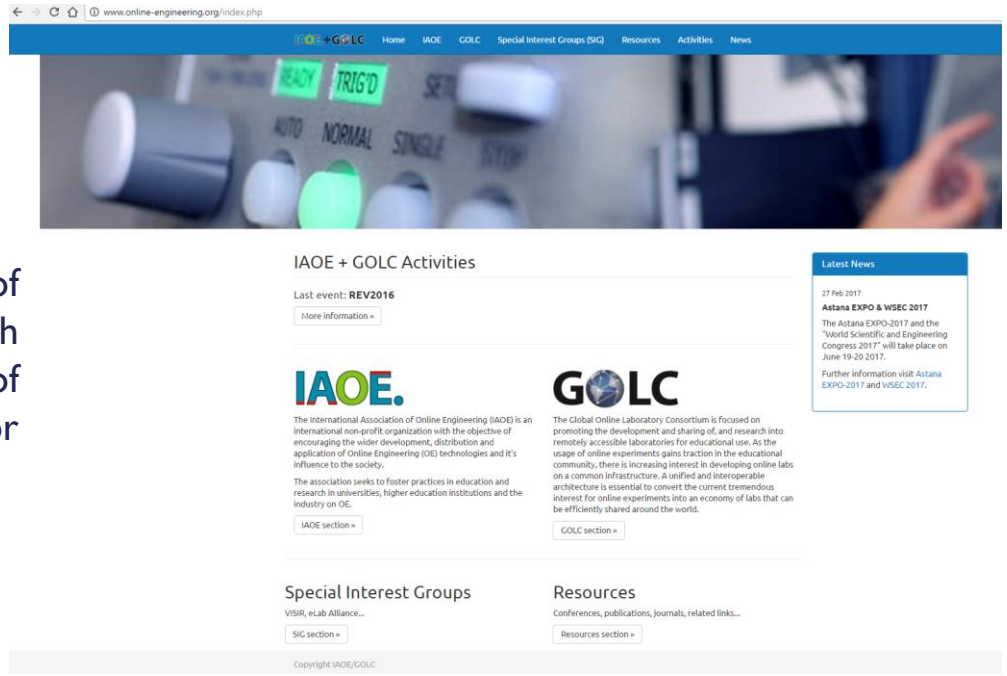

IJOE AND OTHER PUBLICATIONS

http://online-journals.org/

The objective of the journal is to publish and discuss fundamentals, applications and experiences in the field of remote engineering, cyber-physical systems, virtual instrumentation and online simulations. The use of virtual and remote controlled devices and remote laboratories is one of the future trend developments for advanced teleworking/e-working environments.

Last volume was published in March

http://online-journals.org/i-joe

REV CONFERENCES (SINCE 2004)

http://www.rev-conference.org/

REV International Conference on Remote Engineering and Virtual Instrumentation

Home | Steering Committee | Past Conferences | Publication Ethics | Proceedings/Indexing

International Conference on

Remote Engineering and Virtual Instrumentation (REV)

REV is a series of annual events concerning the area of remote engineering and virtual instrumentation. The REV conferences are the annual conferences of the International Association of Online Engineering (IAOE, www.online-engineering.org).

The general objective of this conference is to demonstrate and discuss fundamentals, applications and experiences in the field of remote engineering and virtual instrumentation. With the globalization of education the interest in and need of teleworking, remote services and collaborative working environments now increases rapidly. Another objective of the symposium is to discuss guidelines for education in university level courses for these topics.

Scope of the Conference

Remote Engineering and Virtual Instrumentation are very future trends in engineering and science. Due to:

- the growing complexity of engineering tasks,
- more and more specialized and expensive equipments well as software tools and simulators,
- the necessary use of expensive equipment and software tools/simulators in short time projects,
- the application of high tech equipment also in SME's,
- the need of high qualified staff to control recent equipment,
- the demands of globalization and division of labour,

it is increasingly necessary to allow and organize a shared use of equipment, but also specialized software as for example simulators. Organizers especially encourage people from industry to present their experience and applications of remote engineering and virtual instruments.

Topics of interest include (but are not limited to)

- Virtual and remote laboratories
- Remote process visualization and virtual Instrumentation
- Remote control and measurement technologies
- Online engineering
- Networking and grid technologies
- Mixed Reality environments for education and training
- Demands in education and training, e-learning, b-learning, m-learning and ODL
- Open educational resources (OER)
- Teleservice and telediagnosis
- Telerobotics and telepresence
- Support of collaborative work in virtual engineering environments
- Teleworking environments
- Telecommunities and their social impacts
- Present and future trends, including social and educational aspects
- Human computer interfaces, usability, reusability,accessibility
- Applications and experiences
- Standards and standardization proposals
- Innovative organizational and educational concepts for remote engineering
- Products

REV2017

14th International Conference on Remote Engineering and Virtual Instrumentation

Date and Venue

15-17 March 2017, Columbia University, New York, USA

Overview

The REV conference is the annual conference of the International Association of Online Engineering (IAOE) and the Global Online Laboratory Consortium (GOLC).

REV 2017 is the 14th in a series of annual events concerning the area of Remote Engineering and Virtual Instrumentation. The general objective of this conference is to contribute and discuss fundamentals, applications and experiences in the field of Remote Engineering, Virtual Instrumentation and related new technologies like Internet of Things, Industry 4.0, Cyber Security, M2M and Smart Objects. Another objective of the conference is to discuss guidelines and new concepts for education at different levels for above mentioned topics including emerging technologies in learning, MOOCs & MOOLs, Open Resources and STEM pre-university education. REV2017 will offer an exciting technical program as well as networking opportunities.

Co-Organizers

IAOE, GOLC, IELA

Sponsors

Platinum Sponsor: PHOENIX CONTACT

Gold Sponsor: EMONA

Silver Sponsor: CYPRESS

Bronze Sponsor: IIETA

PHOENX CONTACT | EMONA Instruments | Cypress | IIETA

NATIONAL INSTRUMENTS

Supported by

CTI.

Important Dates

10 Oct 2016	Submission of structured abstracts for full and short papers; Submission of proposals for special sessions
17 Oct 2016	Invitation to submit a full paper or short paper
21 Nov 2016	Submission deadline for complete full and short papers and all other submissions (Special sessions papers, Work in Progress, Demos, Poster, Tutorials, Workshops)
12 Dec 2016	Notification of Acceptance
23 Jan 2017	Author registration and camera-ready due
15 Mar 2017	Conference Opening

Contact

REV Clearing house
info@rev-conference.org
phone: +43-5-90500-2115
phone: +1-202-470-0551

REV 2018 – Düsseldorf

REMOTE ENGINEERING EDUCATIONAL PROGRAMS

- Master level – CUAS, Uporto, University of Technology Bratislava
- Phd – Deusto/Bilbao, Uporto, UNED ,University of Technology Ilmenau

RESEARCH GROUP

ONLINE AND POCKET LABS

Main interest in the actual technical context

- Provide scientific exchange platform on Online and Pocket Labs on our university
- Representation of university at national & international Conferences in these fields
- Research on new platforms and software frameworks to assist and simplify the development of Online Labs
- Development of a scientific general concepts of "Non-classical laboratories" in STEM education
- Scientific and organizational support of the conferences REV, ICL, IMCL and EDUCON

VISIR AND ONLINE LABS IN PROJECTS

- E-pragmatic
- OLAREX
- GoLab
- iCo-op
- eSience
- OnlineLabs4All

E-PRAGMATIC

Project goals

- Implementation of the multi-language e-learning portal to deliver the e-materials and tools for the distance training with remote experiments/remote workstations
- To trigger and sustain the learning motivation of training participants by providing the necessary tools for discuss of the training contents and job related engineering problems.
- Offering new business opportunities by stating the needs, describing the products and activities of the participant institutions and companies.

http://www.e-pragmatic.eu/

E-PRAGMATIC

Project outputs

- Educational approach suitable for distance education in industry was developed. It is based on classical andragogy theory but it takes into account new technical possibilities/tools available in distance learning and results of needs analysis.
- The modules include case studies, concrete problems from industry and practical exercises.
- Half of training modules include remote experiments or remote working stations to facilitate acquisition of practical experience and skills, which weren't used in industrial training before.

OLAREX

Project goals

- To define the school/academia ICT needs for knowledge and skills in STEM;
- To build teachers', students', and museum employees' e-didactic competences in STEM;
- To develop practically-oriented learning modules with remote experiments and integrate contents and functionality in e-learning portal;
- To enhance and modernize the teaching/learning tools and methods for formal and non-formal lifelong learning institutions;
- To initiate the school-enterprises linkage.

www.olarex.eu

OLAREX

Project outputs

- The main output of the OLAREX project was the online training for secondary school teachers that took place in all six consortium countries.
- OLAREX created a pool of trained national representatives of secondary schools in STEM education

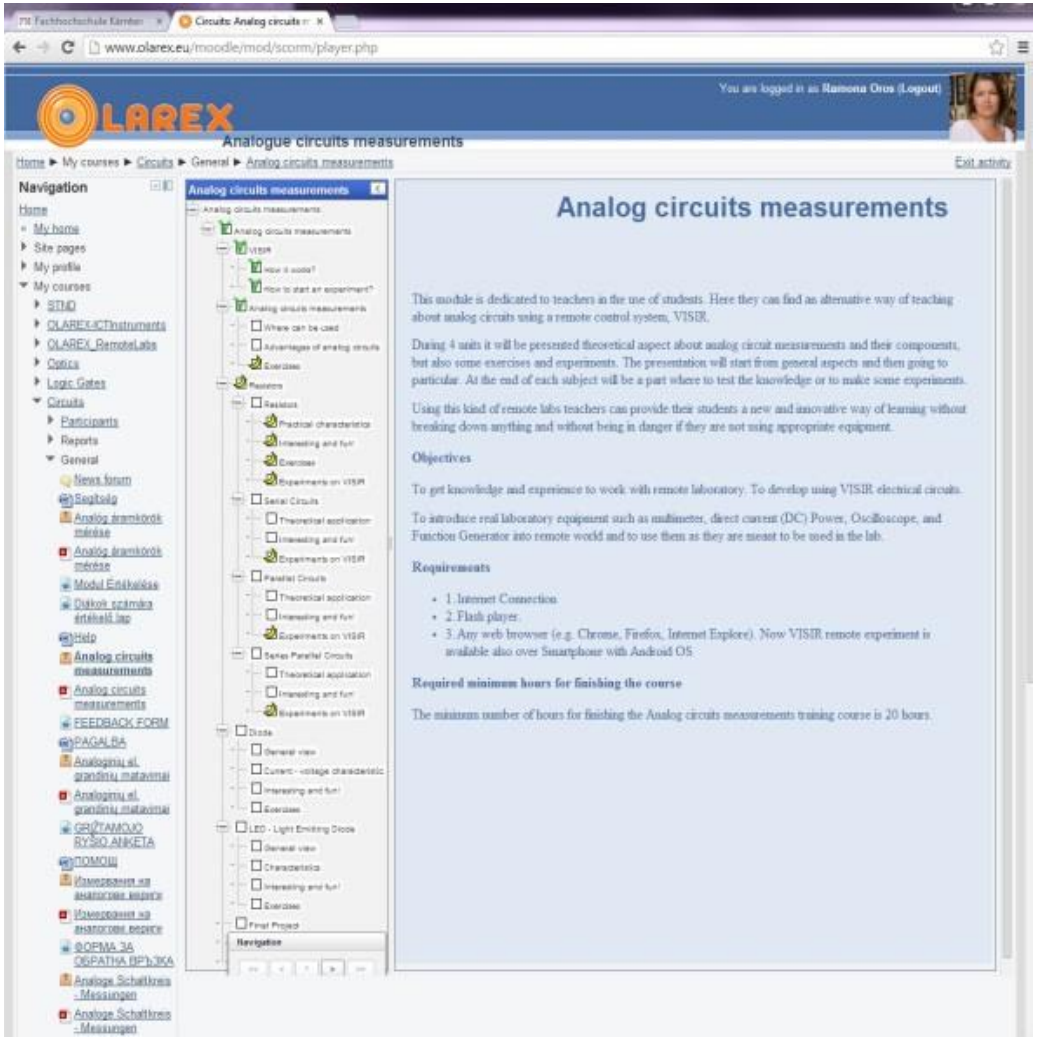

GO-LAB

Project goals

- Creating a pedagogical framework for inquiry learning with online labs that encompass an inquiry processes structure, and for each inquiry process a selection and specification of cognitive scaffolds,
- Building of the Go-Lab federation of online labs to create a pool of online labs, providing one-click access to online labs and personalization facilities with services to easily plug-in and share online labs by the lab-owners, as well as services to integrate additional features.

www.golabz.eu

GO-LAB

www.golabz.eu/lab/visir

ICO-OP

Project goals

- Establish methodology for identification and monitoring of demand for knowledge and skills in industry;
- Deliver learning programs incorporating transversal and using remote laboratories/virtual instrumentation knowledge and competences;
- Build mutually beneficial, sustainable partnerships between academia and enterprises by offering internship programs and up-to-date industry training programs.

www.ico-op.eu

ICO-OP

Project outputs

- Summary book: "Creative Engineering for University, and Vocational Education and Training: Europe, Armenia, Georgia, and Ukraine case studies"
- 24 learning modules that enrich the curricula of partners universities will be delivered:
  - 6 modules with remote experiments have been developed/adapted according to the needs of TC HEI/IND partners,
  - 5 of them offer basic electronics knowledge and alternative/emerging technologies and
  - 3 modules, such as risk management, corporate social responsibility, HR management for transversal knowledge and skills will be developed.
- CUAS developed a knowledge structured pyramid for Remote Laboratories and Virtual Instrumentation from which partners could connect to market solutions.

eScience

Project goals

- Adaptation of content to the development in science and technology
- Creation of three remote laboratory platforms in the Maghreb with iLab
- Creation of a repository for French speaking countries
- Implementation of practical courses for on-distance education
- Creating teaching units in the e-learning format
- Accreditation by ECTS in accordance with the Bologna process
- Diffusion at national level in partner countries and at international level

www.esience.org

eScience

Project goals

- A network of three iLab Service Brokers with experiments related to the market needs will be available by the end of the project in maghrebian countries.
- 15 teaching units will be developed; the content of the different teaching units will be approved by the industrial partners involved in the project.

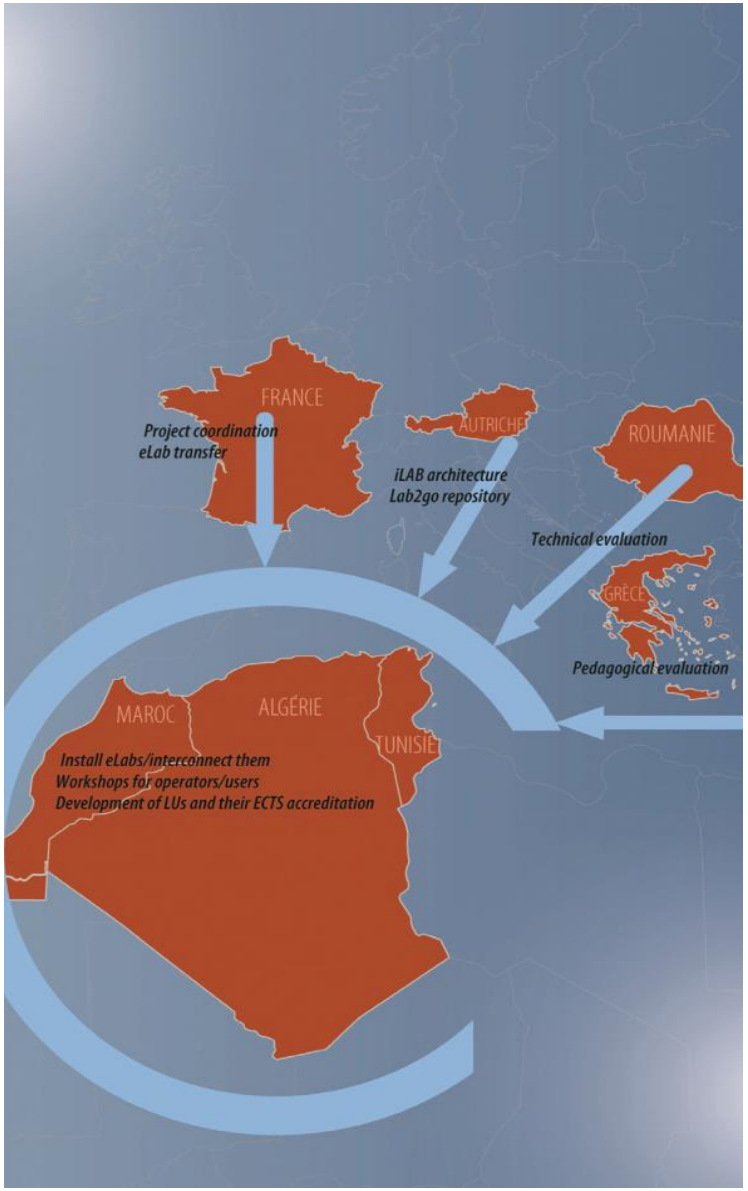

OnlineLabs4All

Project goals

This research project aims at developing adaptive and reusable software components that facilitate the integration of laboratory equipment to the Internet by considering teachers' and students' requirements.

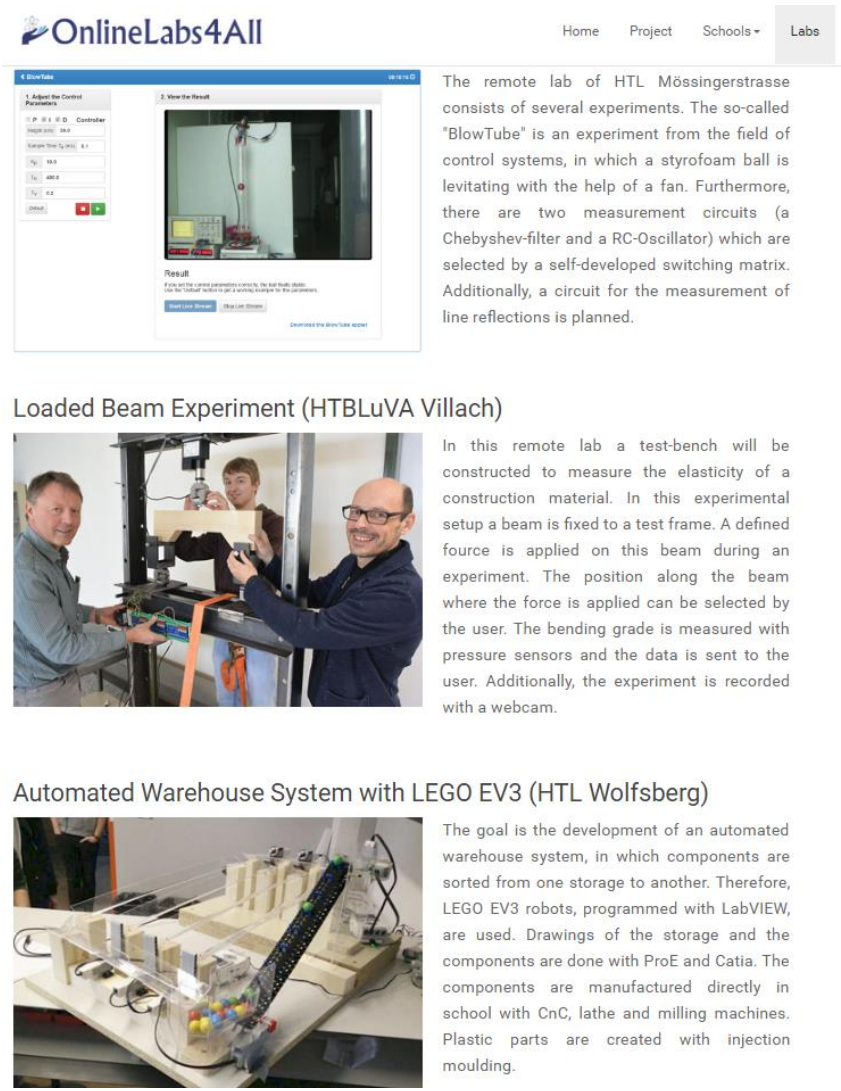

http://www.onlinelabs4all.org

OnlineLabs4All

Project outputs

- Participating on Awards sessions 2015/ 2016 organized by the BMWFW
- Get involved in the Austrian Open Innovation strategy

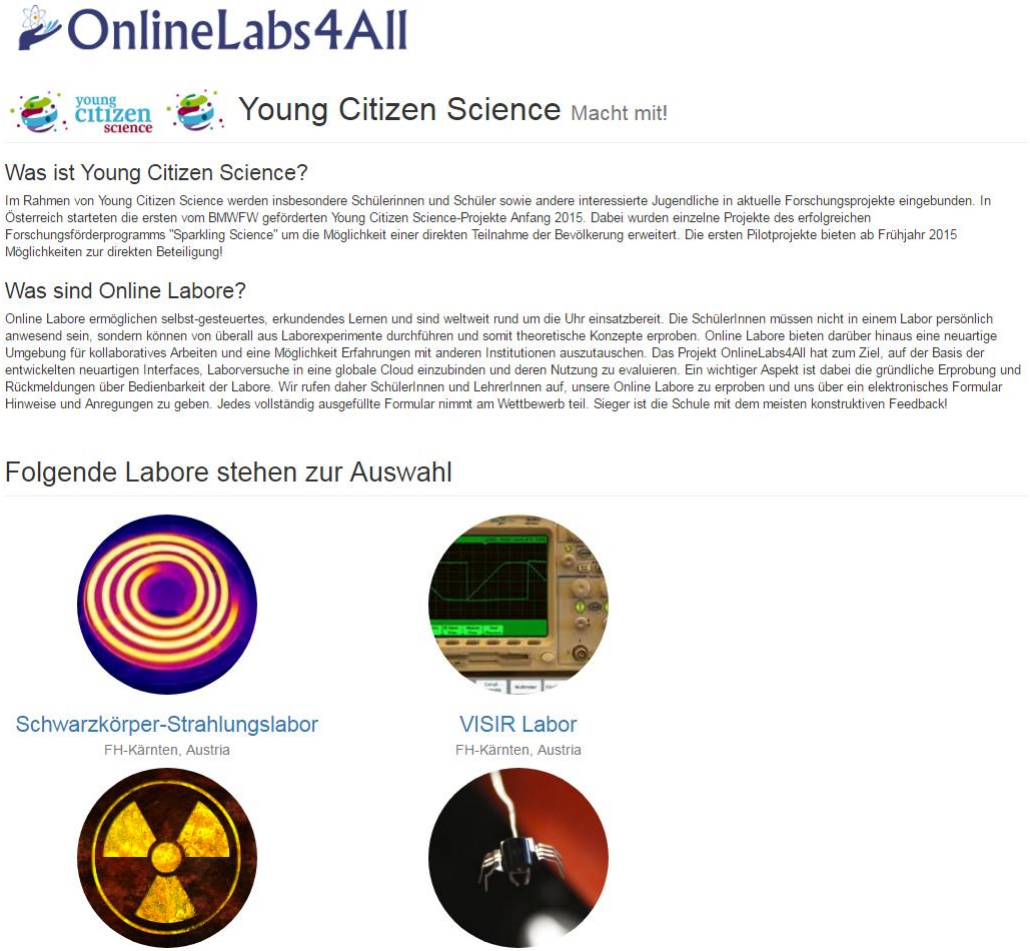

VISIR @ MASTER LEVEL

In the framework of digitalizing laboratory experiments for the standard bachelor courses at CUAS students form Master program – Systems Design/Remote Systems developed works in the field of electronics

- Resonance and frequency responses
- Rectifier circuit
- Bipolar-Transistor, MOSFET, J-FET; characteristic lines and applications

VISIR EXPERIMENTS DEVELOPED BY STUDENTS

Resonance and frequency responses

Goal of the experiments:

- Consolidating and deepening the knowledge of frequency characteristics of AC circuits.
- Developing skills with regard to the effective investigation of frequency characteristic of electronic circuits.
- Practical and appropriate presentation of frequency responses

Experiments:

- Resonance Circuit
- Band stop circuit
- Dual circuit band filter

VISIR EXPERIMENTS DEVELOPED BY STUDENTS

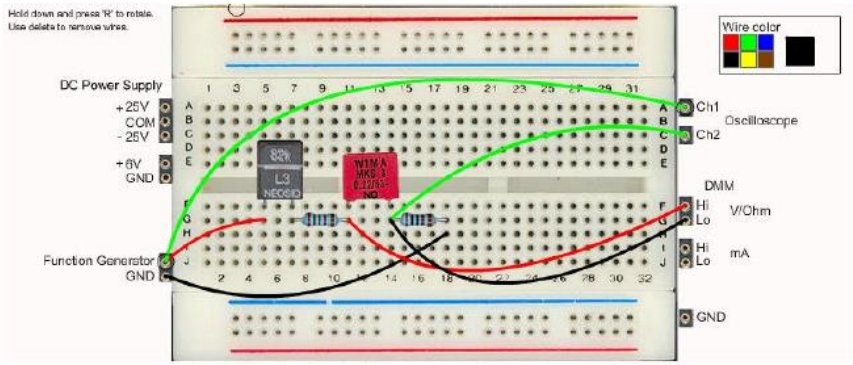

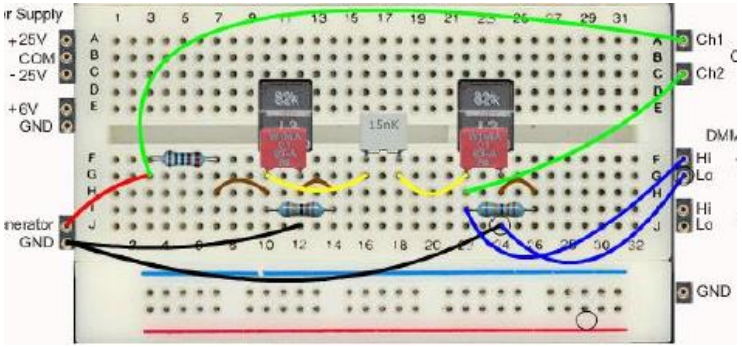

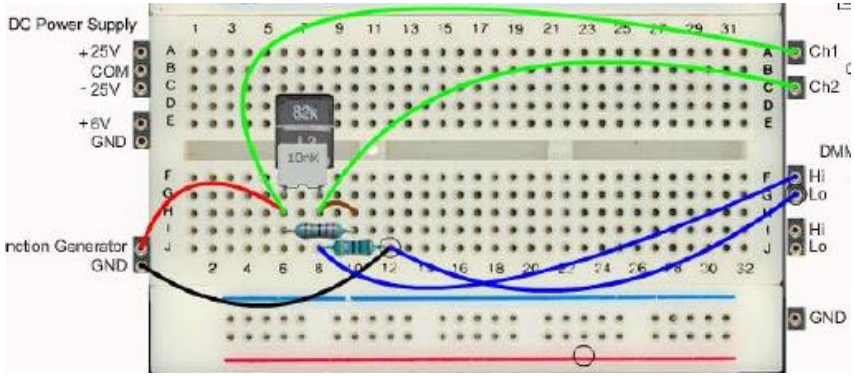

VISIR EXPERIMENTS DEVELOPED BY STUDENTS

Rectifier circuit

The goals of this remote lab experiments are

- To get information about rectifier
- To learn more about the usage of rectifier
- To build up a rectifier circuit and see the behavior of the system

Experiments:

- Half-wave circuit and the full-wave circuit
- Half-wave circuit with additional capacitor and the full-wave circuit with additional capacitor

VISIR EXPERIMENTS DEVELOPED BY STUDENTS

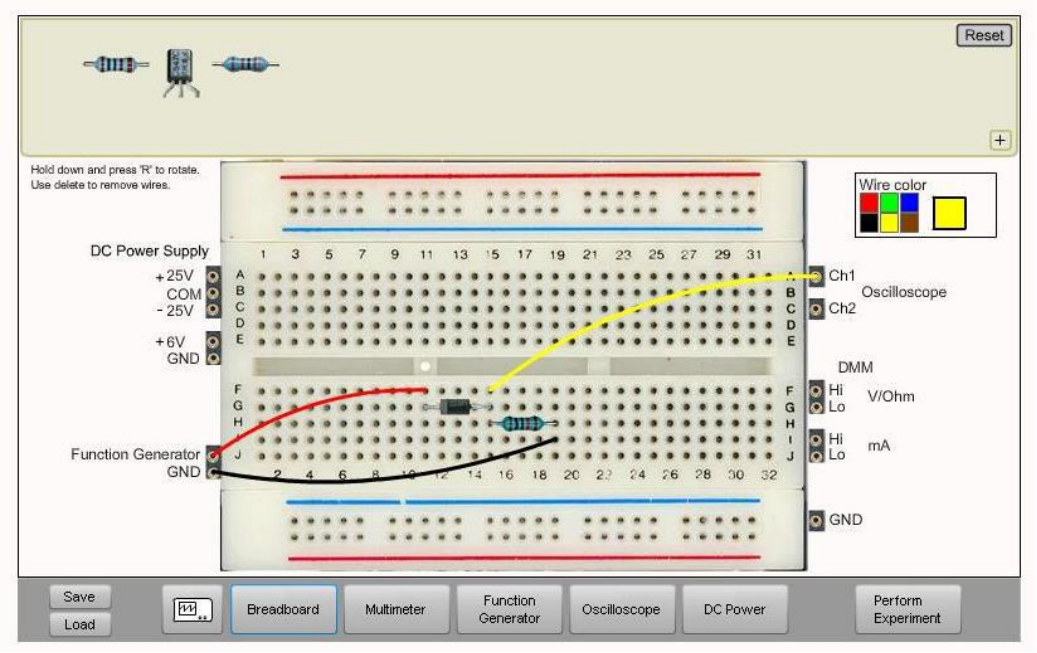

VISIR EXPERIMENTS DEVELOPED BY STUDENTS

- Bipolar-Transistor, MOSFET, J-FET; characteristic lines and applications
- Goals:
  - Getting used to the characteristic behaviour of the components
- Experiments:
  - Bipolar Transistor and MOSFET as switches
  - J-FET as controllable resistor

VISIR EXPERIMENTS DEVELOPED BY STUDENTS

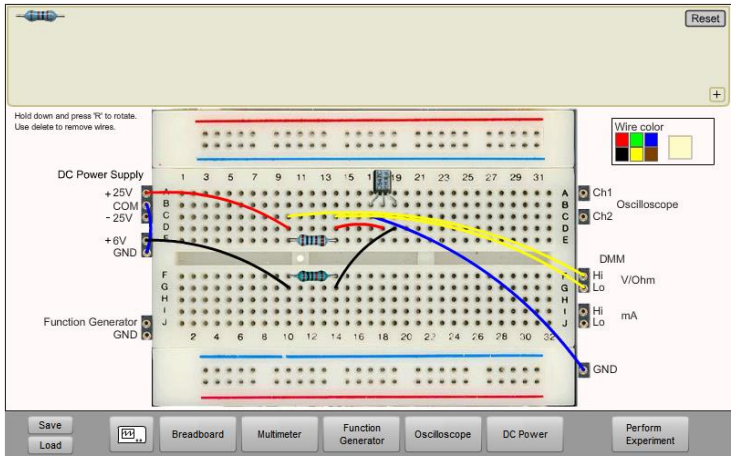

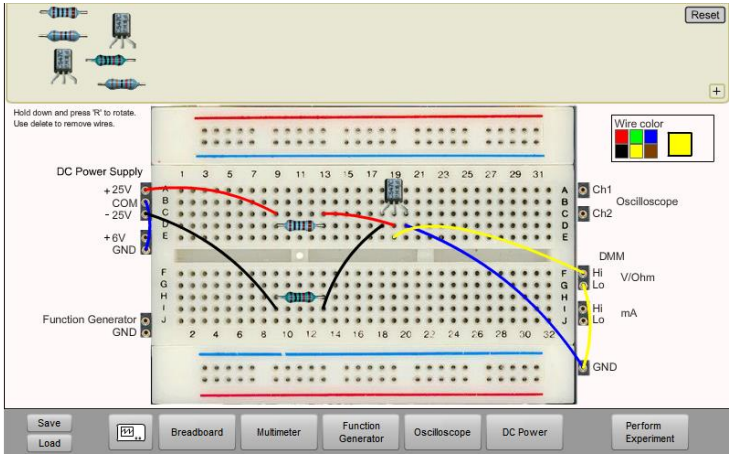

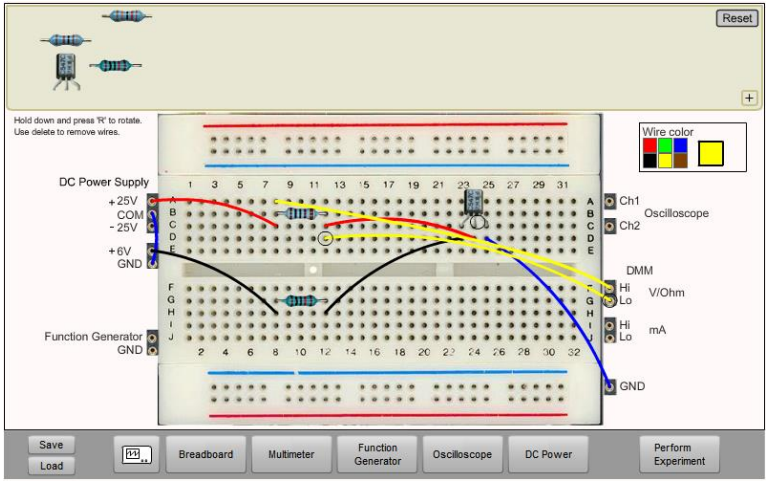

CARINTHIA UNIVERSITY OF APPLIED SCIENCES

FACHHOCHSCHULE KÄRNTEN

Co-funded by the Erasmus+ Programme of the European Union

VISIR+

THANK YOU FOR YOUR ATTENTION!

QUESTIONS?

OPEN DISCUSSIONS